125mm Rotacasters

Bores (nominal)

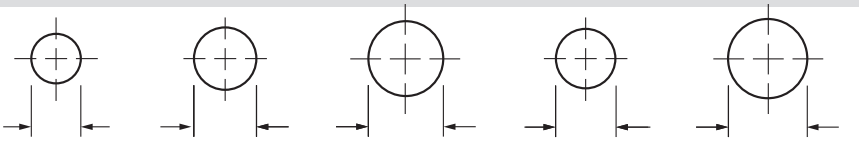

Roller Type	Load Capacity Lateral / Dynamic	Bush/Bearing		ID Ø8	Ø10	Ø12	Ø9.52	Ø12.7
85A Polyurethane Roller on Nylon bushing	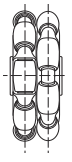 **R2** 68/115 Kg	R2-1258-85	No Bearing					
			Nylon	---	---	R2-1258-85/N12	---	R2-1258-85/N13
			Shielded	---	R2-1258-85/Z10	---	R2-1258-85/Z09	---
			Sealed	R2-1258-85/S08	R2-1258-85/S10	R2-1258-85/S12	---	R2-1258-85/S13
95A Polyurethane Roller on Nylon bushing	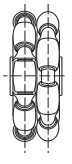 **R2** 68/125 Kg	R2-1258-95	No Bearing					
			Nylon	---	---	R2-1258-95/N12	---	R2-1258-95/N13
			Shielded	---	R2-1258-95/Z10	---	R2-1258-95/Z09	---
			Sealed	R2-1258-95/S08	R2-1258-95/S10	R2-1258-95/S12	---	R2-1258-95/S13
95A Polyurethane Roller on Nylon bushing	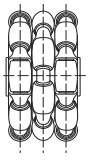 **R3** 80/160 Kg	R3-1258-95	No Bearing					
			Nylon	---	---	R3-1258-95/N12	---	R3-1258-95/N13
			Shielded	---	R3-1258-95/Z10	---	R3-1258-95/Z09	---
			Sealed	---	R3-1258-95/S10	R3-1258-95/S12	---	R3-1258-95/S13

Wheel Dimensions (in mm)

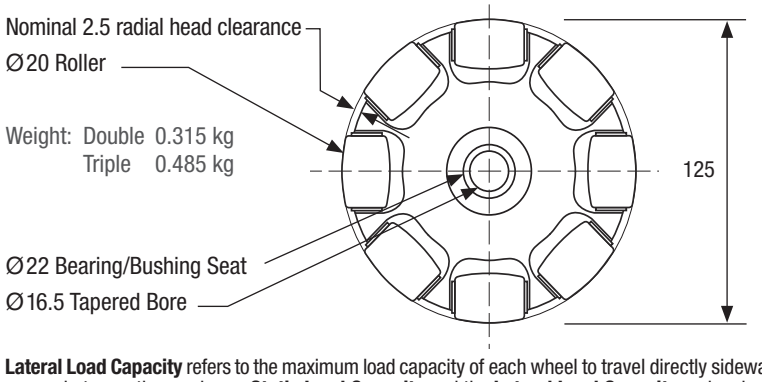

R2 **R3**

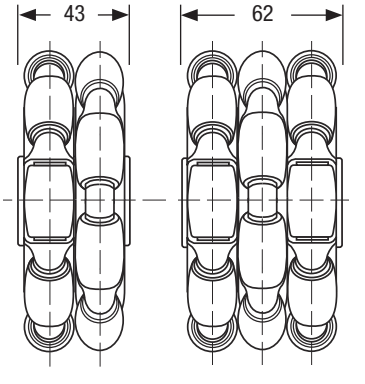

Conversion

Metric	Imperial
3.18 mm	1/8”
6.35 mm	1/4”
8.00 mm	5/16”
9.52 mm	3’8”
11.10 mm	7/16”
12.70 mm	1/2”
15.88mm	5/8”
25.40 mm	1”
1 kg	2.2 lb

Lateral Load Capacity refers to the maximum load capacity of each wheel to travel directly sideways without radial head contact. ■ The **Dynamic Load Capacity** (while in motion) ranges between the maximum **Static Load Capacity** and the **Lateral Load Capacity** and varies proportionally to speed of the wheel travelling in its primary direction. ★ Single wheels must be combined with an adjacent wheel indexed to form a continuous circular circumference - load capacity is based on two adjacent single wheels. ■ 12mm and 1/2” bush may require hub refit.

Distributor www.magnusinc.com toll free 800 858 7801

rotacaster.com.au

rotacaster™ the ultimate in manoeuvrability

Rotacaster products are patented or patented pending

© 2012 Rotacaster Wheel Limited

125 mm Rotacaster Single Mounts

Steel Fork - Zinc Plated

	R2 Formed	**R2** Welded	**R3** Welded	**R4** Formed
85A	R2-1258-85/MF	R2-1258-85/MW	---	R4-1258-85/MF
95A	R2-1258-95/MF	R2-1258-95/MW	R3-1258-95/MW	R4-1258-95/MF
Load Capacity Lateral / Dynamic	68/125 Kg	68/125 Kg	80/160 Kg	120/220 Kg

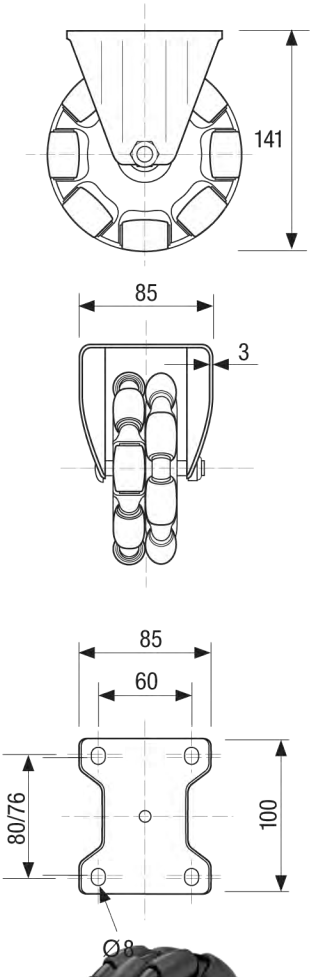

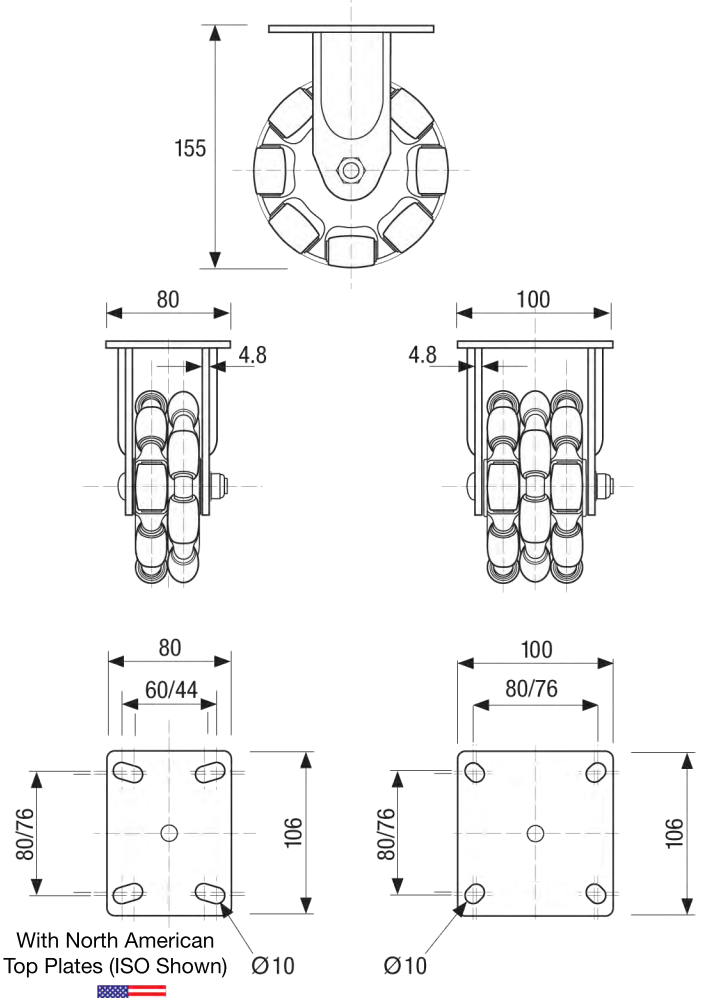

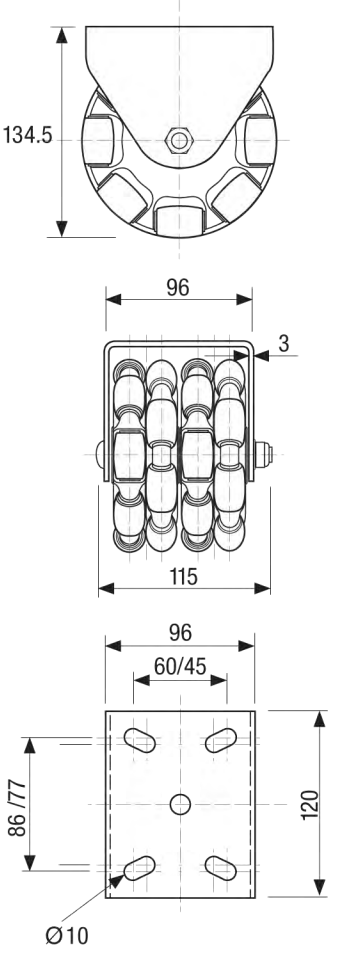

Distributor www.magnusinc.com toll free 800 858 7801

rotacaster.com.au

rotacaster™
the ultimate in manoeuvrability

Rotacaster products are patented or patented pending

© 2012 Rotacaster Wheel Limited

125mm Rotacaster Multi Mounts

Zinc Plated Mild Steel	1100 mm Mount Channel	320 mm /2 (Dynamic Capacity)	320 mm /3 (Dynamic Capacity)

Channel only
Kit: 11-9110

	85A	---	R2-1258-85/MM2 (135Kg)	R2-1258-85/MM3 (200Kg)
	95A	---	R2-1258-95/MM2 (165Kg)	R2-1258-95/MM3 (240Kg)
	95A	---	R3-1258-95/MM2 (220Kg)	R3-1258-95/MM3 (300Kg)
	85A	---	R4-1258-85/MM2 (220Kg)	R4-1258-85/MM3 (300Kg)
	95A	---	R4-1258-95/MM2 (250Kg)	R4-1258-95/MM3 (340Kg)

Multi Mounts 320mm

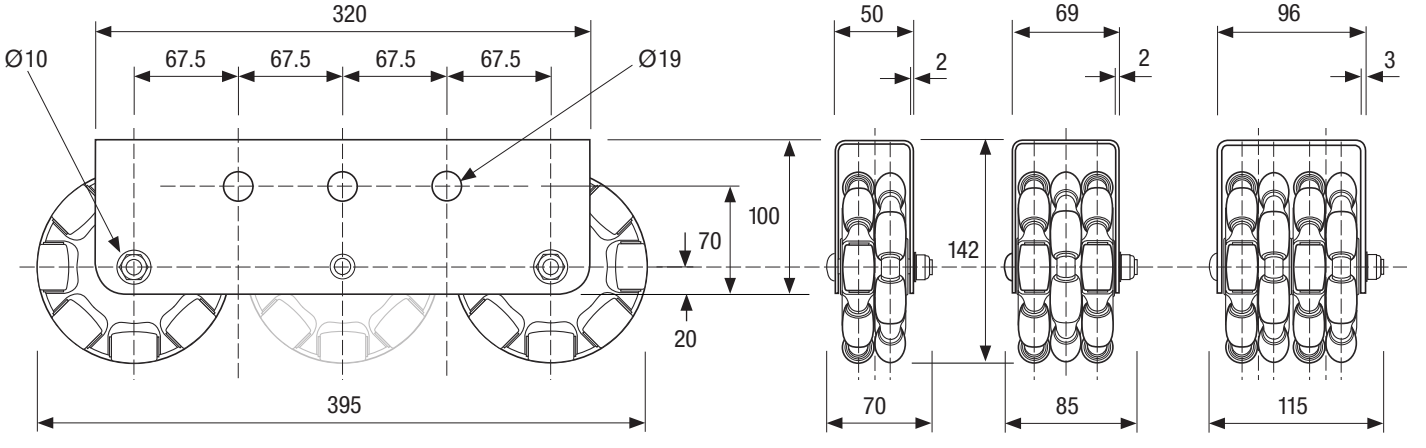

Multi Mounts 1100mm R4

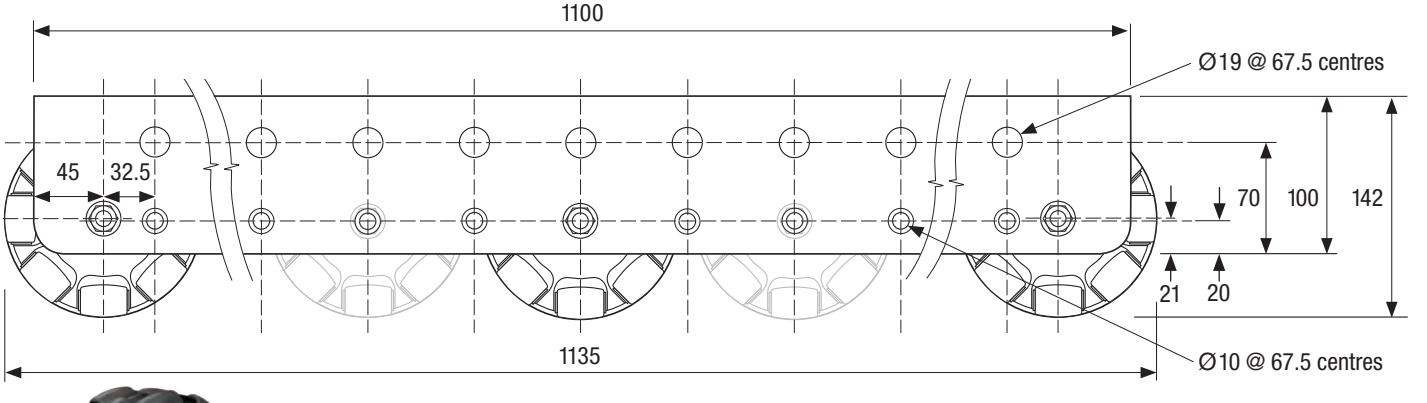

Distributor www.magnusinc.com toll free 800 858 7801

rotacaster.com.au

rotacaster™
the ultimate in manoeuvrability

Rotacaster products are patented or patented pending

© 2012 Rotacaster Wheel Limited

125mm Rotacaster Accessories

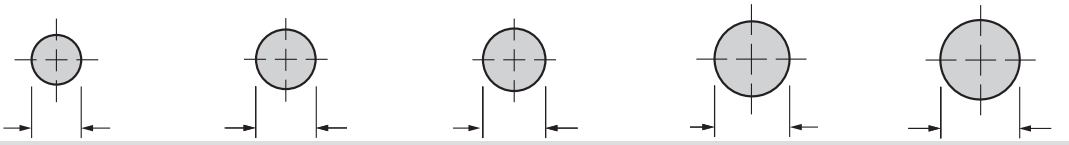

Bores	Ø8	Ø9.52	Ø10	Ø12	Ø12.7

Nylon Bushings / Spacers

Length	ID Ø8	Ø10	Ø12	Ø12.7
	OD Ø12.7	Ø15.88	Ø15.88	Ø15.88
25.2	13-9602-0813-025	13-9602-1016-025	13-9602-1216-025	13-9602-1316-025
50.4	13-9602-0813-050	13-9602-1016-050	13-9602-1216-050	13-9602-1316-050
75.6	---	13-9602-1016-075	13-9602-1216-075	13-9602-1316-075

Nylon Axle Caps

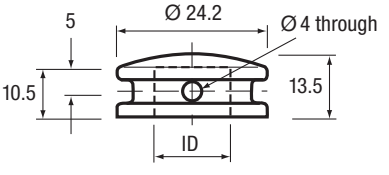

	Ø12 ID	Ø12.7 ID
	13-2022-12	13-2022-13

Floor Brakes

150mm Lift-Up Floor Lock
11-9002

Mounting height: 142mm
Load capacity: 200Kg

137mm Friction Lock
11-9003

Mounting height: 132mm
Load capacity: 770Kg

Distributor www.magnusinc.com toll free 800 858 7801

rotacaster.com.au

rotacaster™
the ultimate in manoeuvrability

Rotacaster products are patented or patented pending

© 2012 Rotacaster Wheel Limited